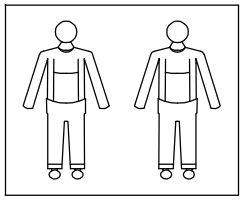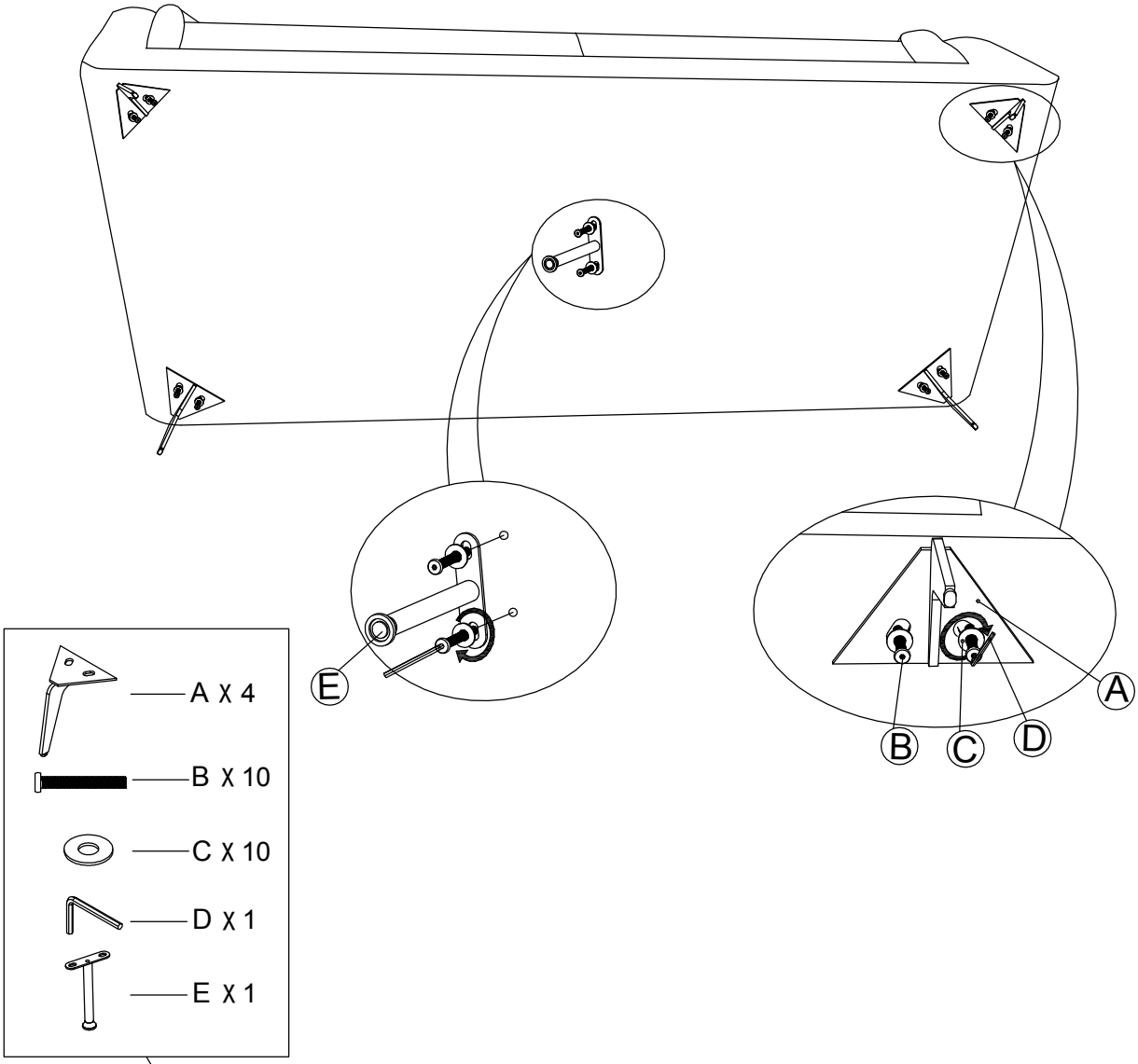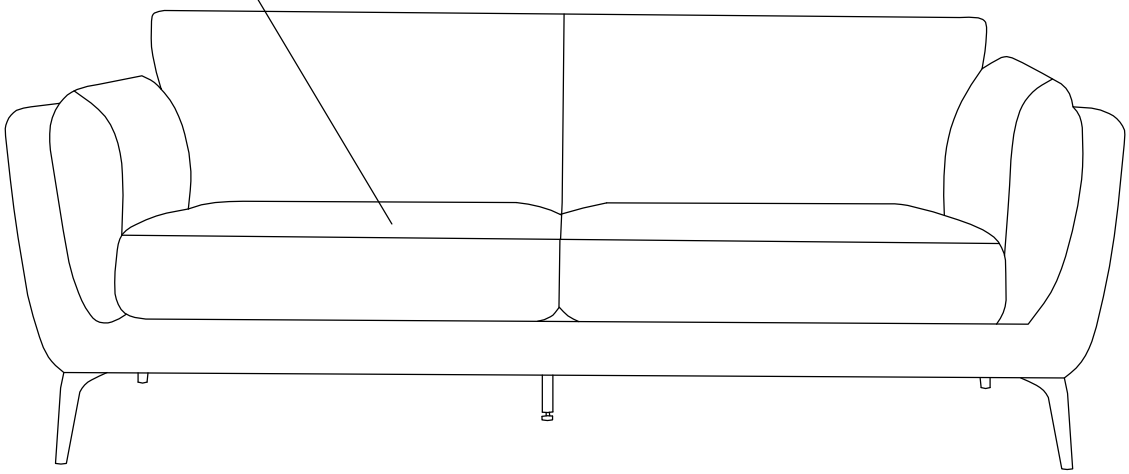ASSEMBLY INSTRUCTION